PLANET Networking & Communication

Pioneer of IP Innovation

Industrial 2-port 10/100/1000T 802.3at PoE+ *Injector Hub*

IPOE-260/IPOE-260-12V

www.planet.com.tw

Copyright © PLANET Technology Corporation. All rights reserved.

Presentation Outlines

- Product Positioning
- Product Overview
- Product Advantages
- Product Features
- Applications
- Comparison Table
- Appendix

PLANET Networking & Communication

Pioneer of IP Innovation

Product Positioning

www.planet.com.tw
Copyright © PLANET Technology Corporation. All rights reserved.

PLANET 802.3at PoE+ Injector Family

Two PoE ports

Compact Size

IPOE-260
- 10/100/1000T
- 36W PoE output
- 48-56V DC input
- -40~75 degrees C

Compact Size

IPOE-260-12V
- 10/100/1000T
- 36W PoE output
- 12-56V DC input
- -40~75 degrees C

Single PoE port

POE-164
- 10/100TX
- 30W PoE output
- Internal AC power
- 0~50 degrees C

POE-163
- 10/100/1000T
- 30W PoE output
- Internal AC power
- 0~50 degrees C

POE-161
- 10/100/1000T
- 30W PoE output
- External AC power
- 0~50 degrees C

IPOE-162
- 10/100/1000T
- 30W PoE output
- 12-48V DC input
- -40~75 degrees C

New Phase-in

Available

Commercial Grade | **Industrial Grade**

PLANET Networking & Communication

Pioneer of IP Innovation

Product Overview

www.planet.com.tw

Copyright © PLANET Technology Corporation. All rights reserved.

PoE Injector Introduction

- What is PoE Injector?

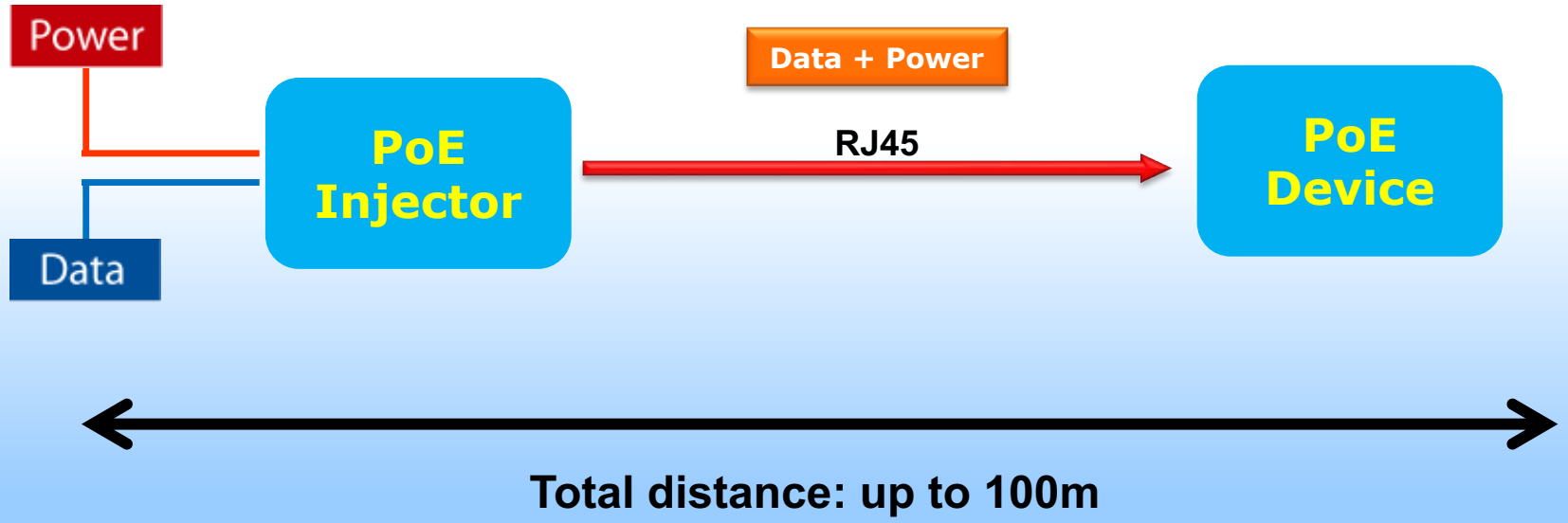

Product Overview

Front Panel

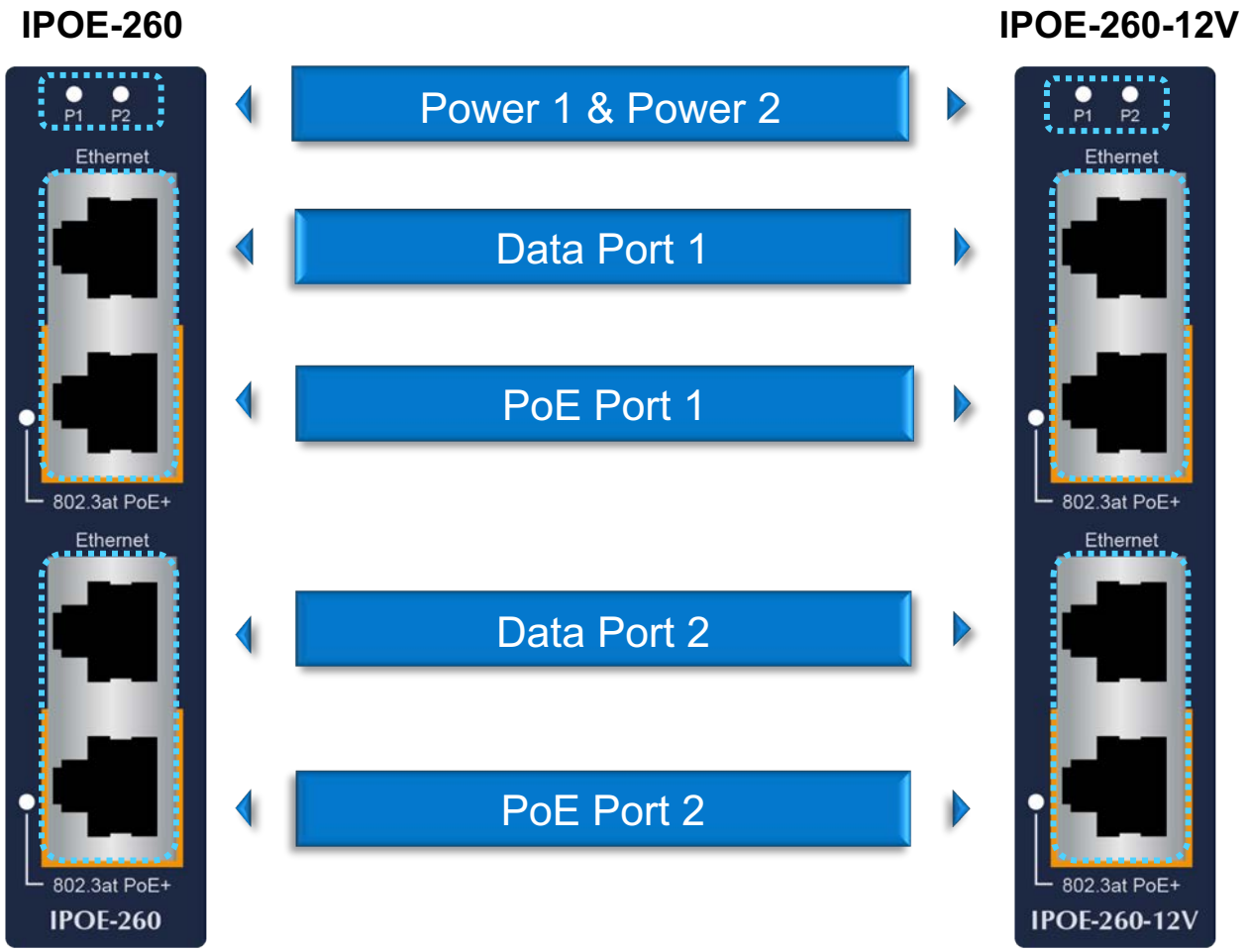

Product Overview

Top Panel

✓ 4-pin Removable Terminal Block

- 48~56V DC power input (IPOE-260)
- 12~56V DC power input (IPOE-260-12V)
- Redundant power with reverse polarity protection

IPOE-260

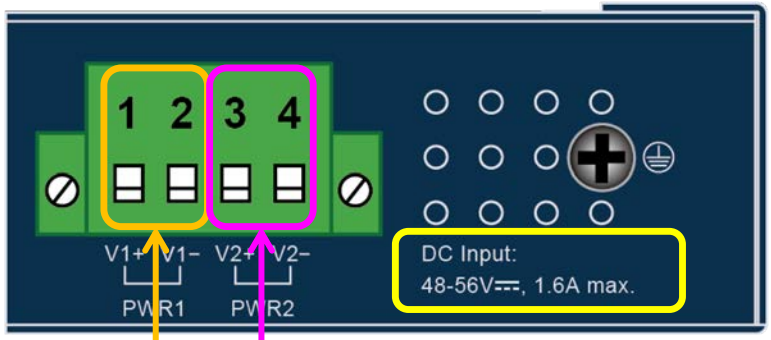

IPOE-260-12V

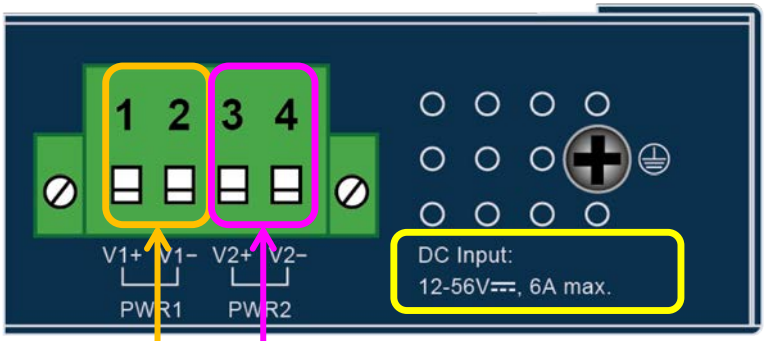

Product Overview

Mechanical Drawing of IPOE-260

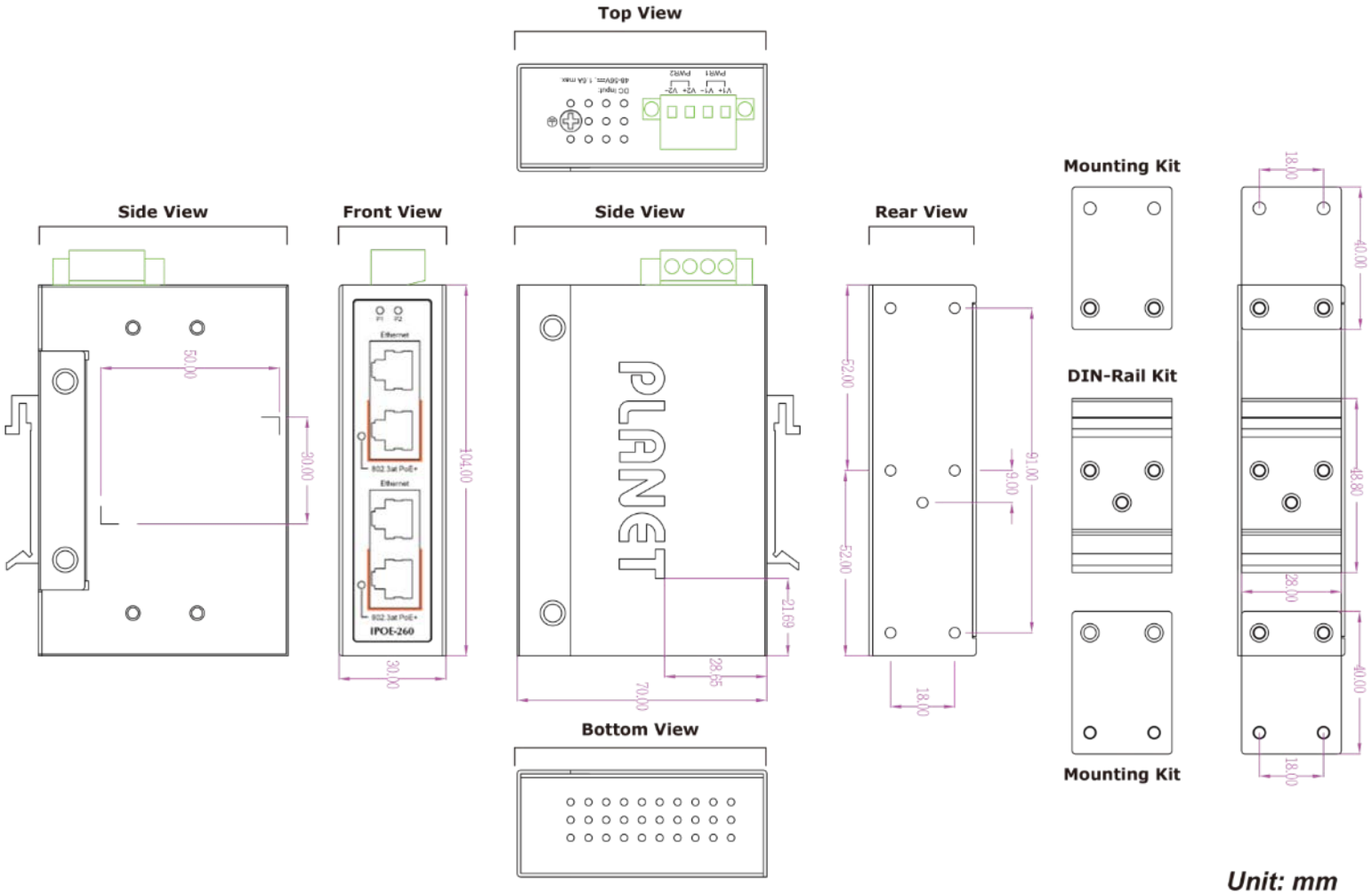

Product Overview

Mechanical Drawing of IPOE-260-12V

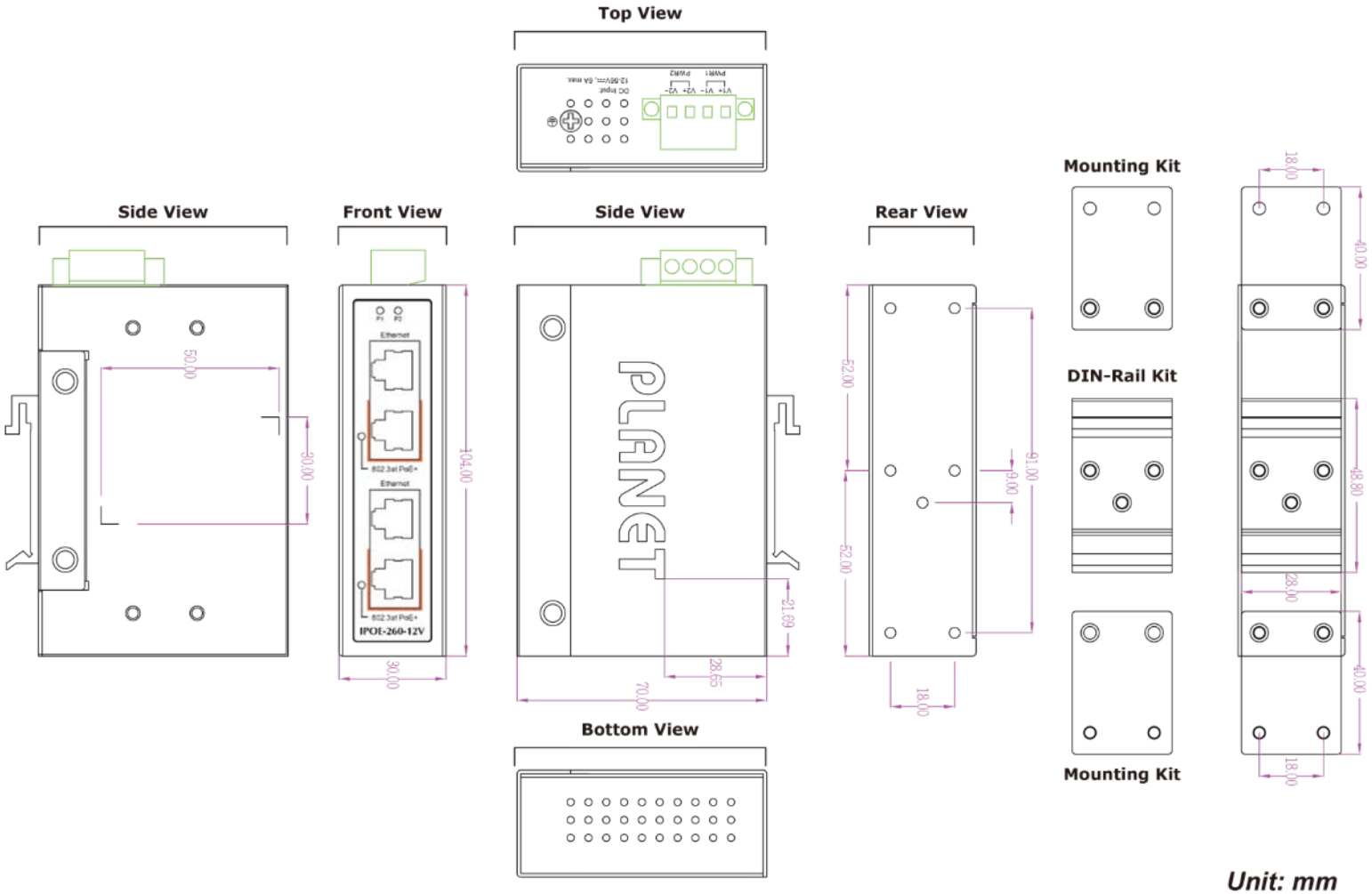

PLANET Networking & Communication

Pioneer of IP Innovation

Product Advantages

www.planet.com.tw
Copyright © PLANET Technology Corporation. All rights reserved.

Product Advantages

- As required by customers

Complies with IEEE 802.3at PoE+ mid-span PSE

Up to 36 watts of output per PoE port

Dual-redundant DC input power

Wide operating temperature from -40 to 75 degrees C

PLANET Networking & Communication

Pioneer of IP Innovation

Product Features

www.planet.com.tw
Copyright © PLANET Technology Corporation. All rights reserved.

Product Key Features

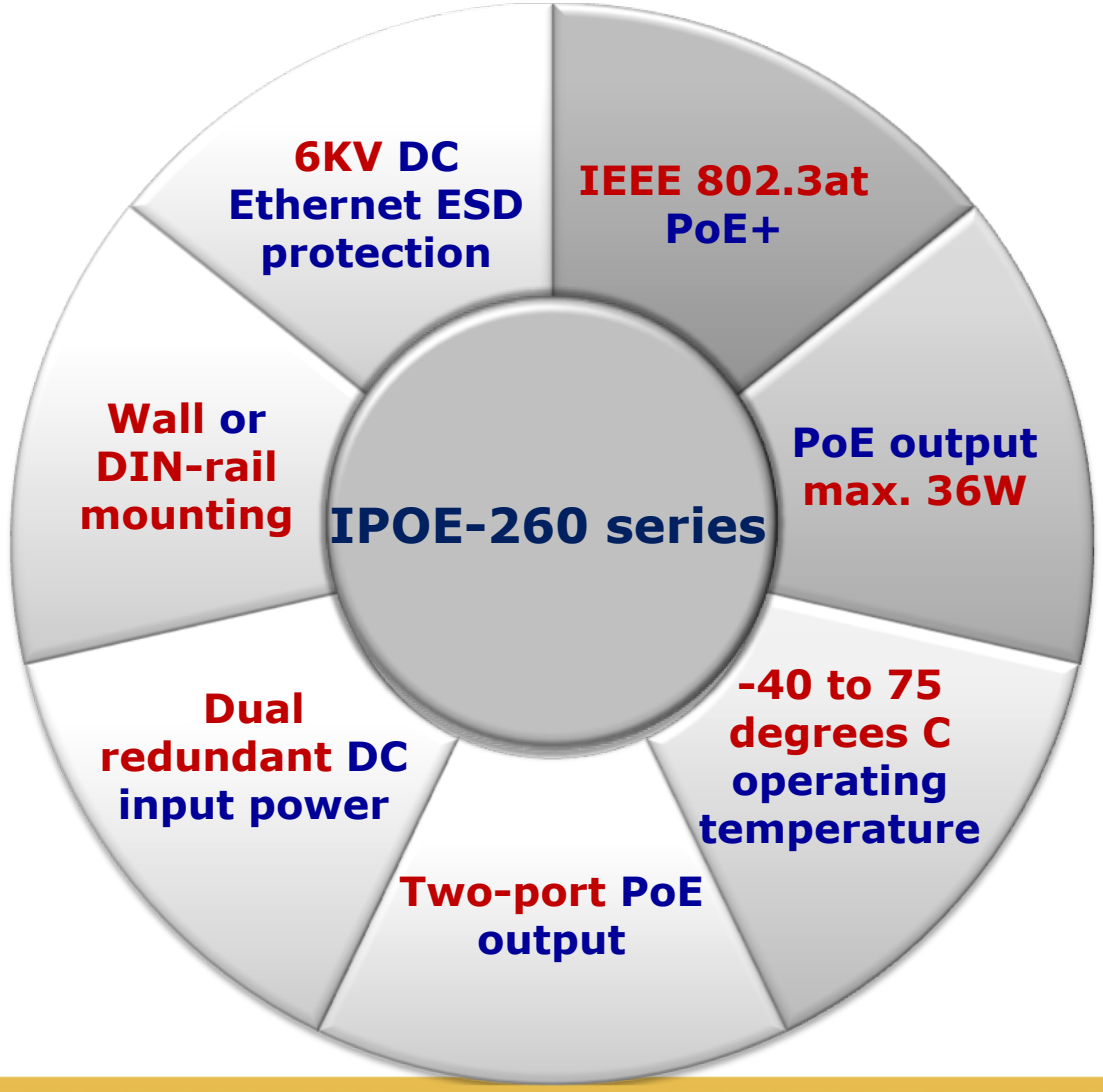

Product Features

PoE

- Complies with IEEE 802.3at PoE+ mid-span PSE
- Supports PoE power up to 36 watts for each PoE port
- Supplies max. 72-watt PoE power budget
- Distance up to 100 meters
- Power Boost for 54V DC PoE output (IPOE-260-12V)

Power Boost for PoE Output

What is Power Boost?

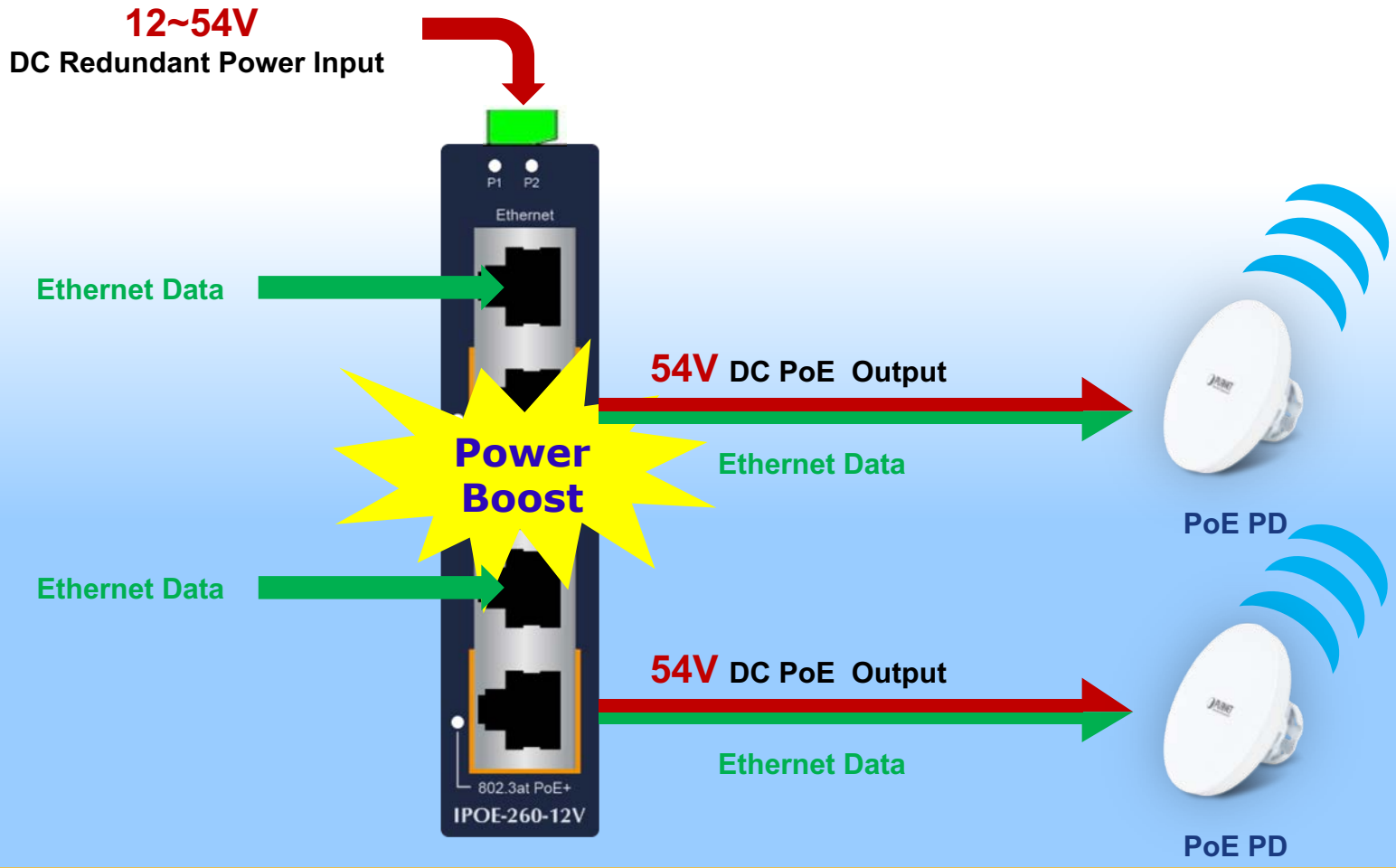

Compact-sized Design

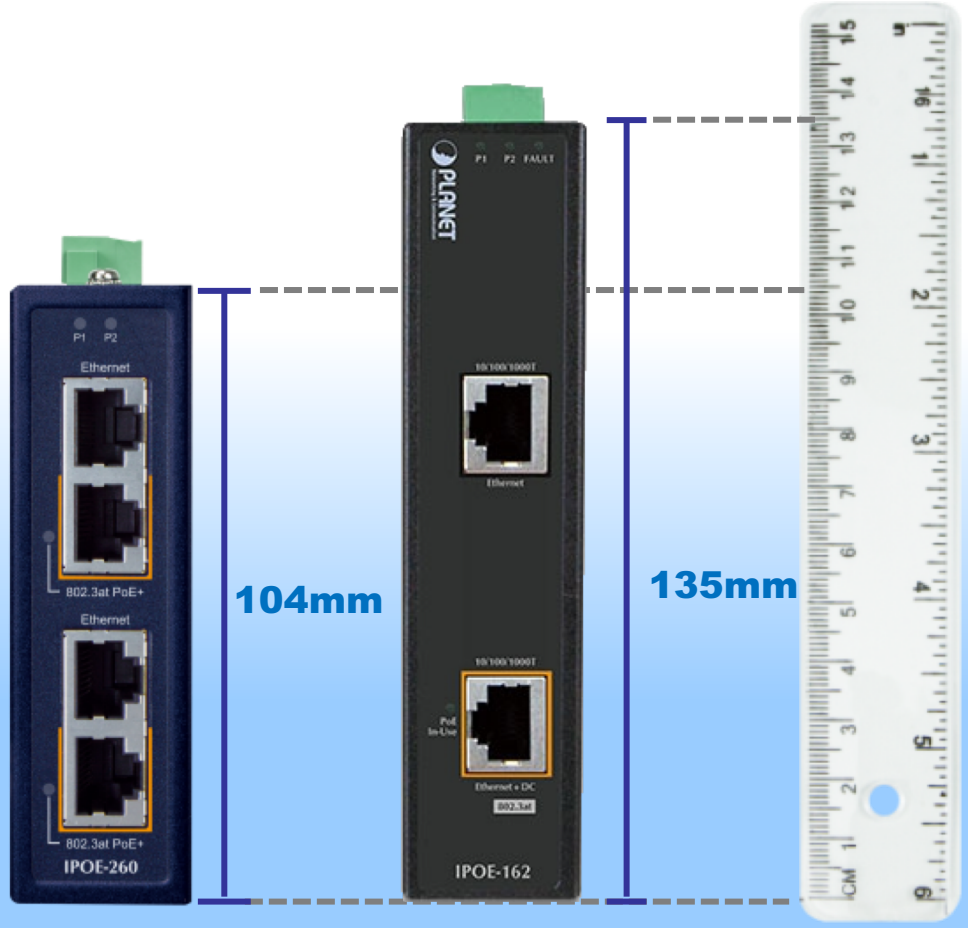

Compact Industrial PoE+ Injector

Product Specifications

Hardware

- 4 10/100/1000BASE-T RJ45 interfaces
  - 2-port PoE power + data output.
  - 2-port data input.
- DC redundant power with reverse polarity protection
- Power Range: 48 ~ 56V DC redundant power (IPOE-260)
- Power Range: 12 ~ 56V DC redundant power (IPOE-260-12V)
- LED indicators for power LED and PoE-in-use

Product Specifications

Industrial Case and Installation

- ✓ IP30 slim metal case
- ✓ DIN-rail, wall-mount or side wall-mount design
- ✓ Supports 6KV DC Ethernet ESD protection
- ✓ -40 to 75 degrees C operating temperature

Three Types of Installation

- **Suitable for any space-limited location**
  - ✓ **The compact-sized IPOE-260 series is specially designed to be installed in a narrow environment.**

DIN-rail Mounting

Wall Mounting

Side Wall Mounting
(Space saving)

PLANET Networking & Communication

Pioneer of IP Innovation

Applications

Copyright © PLANET Technology Corporation. All rights reserved.

Applications

IEEE 802.3at Injector Installation

- The IPOE-260 series allows users to flexibly deploy standard and high powered devices through one Ethernet cable for up to 100 meters.

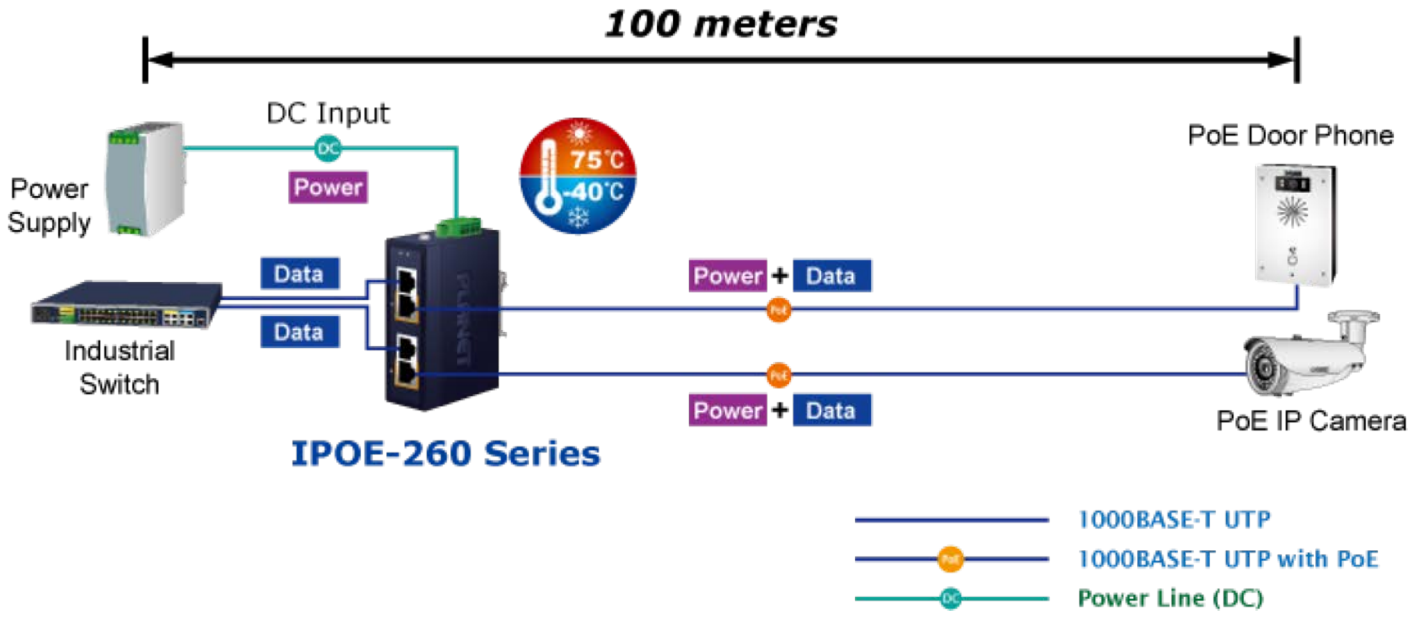

Applications

IEEE 802.3at Injector and Splitter Installation

- The best solution to places without electrical outlets, the IPOE-260 series and IPOE-162S operate as a pair to power your non-PoE devices.

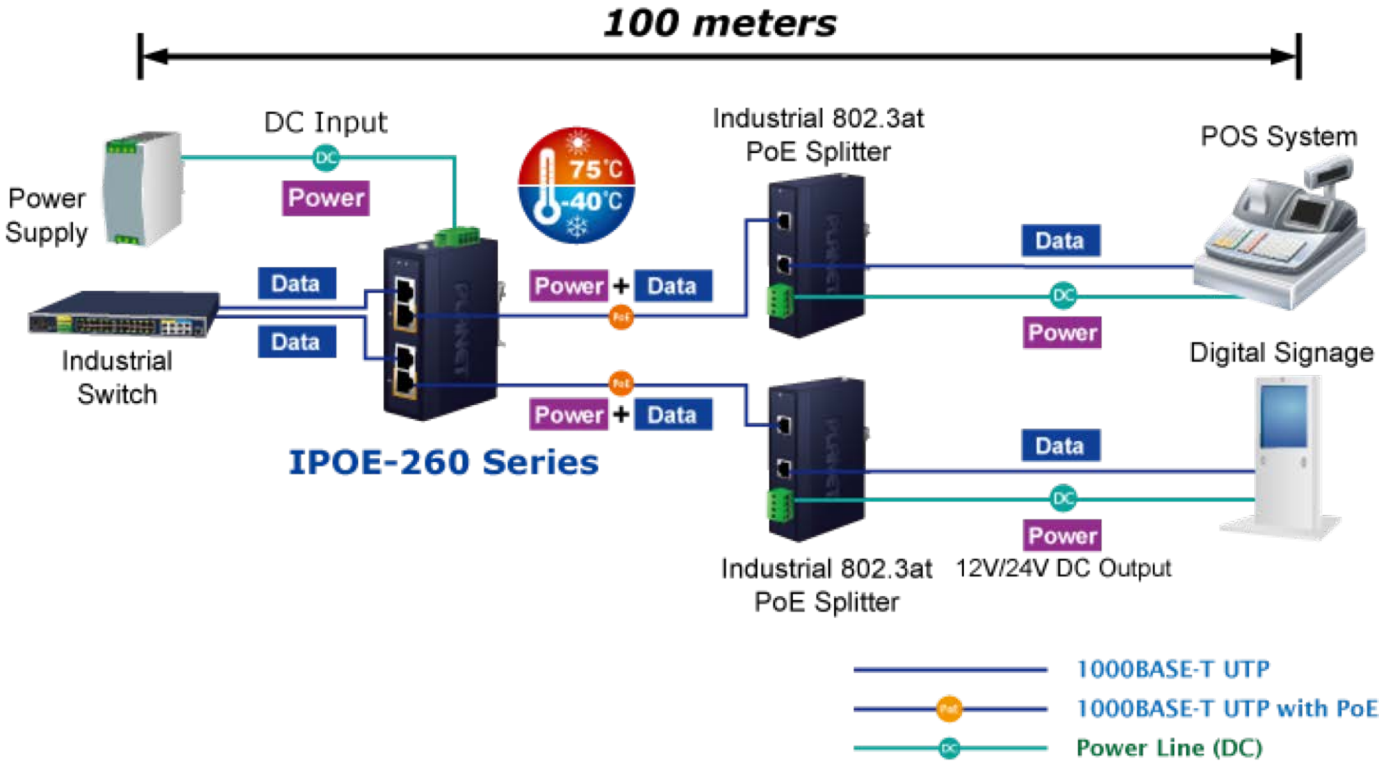

Applications

- **IEEE 802.3at Injector and Extender Installation**
  - ✓ **To achieve the long-distance IP camera distribution, the IPOE-260 series and IPOE-E202 can be a quick and cost-effective solution.**

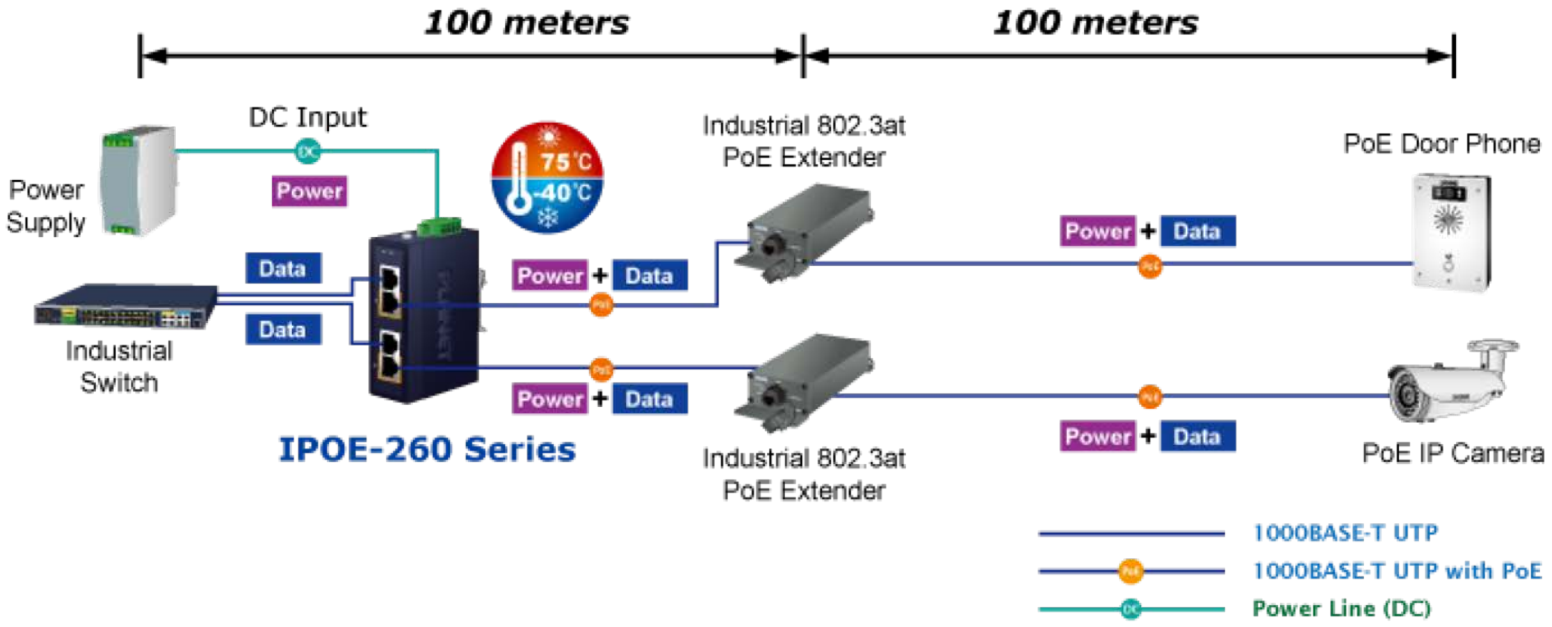

PLANET Networking & Communication

Pioneer of IP Innovation

Comparison Table

www.planet.com.tw
Copyright © PLANET Technology Corporation. All rights reserved.

Comparison Table

Brand & Model	PLANET IPOE-260-12V	PLANET IPOE-260	PLANET IPOE-162
PoE Output	IEEE 802.3at	IEEE 802.3at	IEEE 802.3at
RJ45 Port	Data & PoE output x 2 Data input x 2	Data & PoE output x 2 Data input x 2	Data & PoE output x 1 Data input x 1
DC Output (max.)	36W	36W	30W
PoE Budget	72W	72W	30W
Power Input	Dual 12~56V DC	Dual 48~56V DC	Dual 12~48V DC
Power Boost	Yes	-	Yes
Temperature	-40-75 degrees C	-40-75 degrees C	-40-75 degrees C
Dimensions (W x D x H)	30 x 70 x 104mm	30 x 70 x 104mm	32 x 87 x 135 mm

PLANET Networking & Communication

Pioneer of IP Innovation

Appendix

Copyright © PLANET Technology Corporation. All rights reserved.

Appendix Sales Targets

- **Target Markets**
  - ✓ Factory
  - ✓ System integrators and service providers
  - ✓ Tender market (public construction)
  - ✓ Transportation, hospital, mall, etc.

- **Recommended Solutions**
  - ✓ For space-limited environment
  - ✓ 2-port 802.3at solution
  - ✓ Popular 802.3at Gigabit solutions

Appendix

- **Related PoE IP Cameras and IP Intercoms:**

Model Name		Description
ICA-4250		1080p IR Dome PoE IP Camera
ICA-3250		1080p IR Bullet PoE IP Camera
ICA-3460V		H.265 4MP PoE Bullet IR IP Camera with Vari-focal Lens
ICA-4460V		H.265 4MP PoE Dome IR IP Camera with Vari-focal Lens
HDP-1160PT		720p SIP Vandalproof Door Phone with PoE
VTS-700P		7-inch SIP Indoor Touch Screen PoE Video Intercom

Appendix

- **Related PoE Wireless Products:**

Model Name		Description
WDAP-802AC		1200Mbps Dual Band 802.11ac Outdoor Wireless AP (IP68, 802.3at PoE+, 4 x N-type Connector)
WAP-252N		2.4GHz 802.11n 300Mbps Outdoor Wireless AP (IP67, 802.3af/at PoE, 2 x N-Type Connector)
WDAP-8350		600Mbps 802.11n Dual Band Outdoor Wireless CPE (IP66, 802.3at PoE, 4 x N-type Connector)
WAP-552N		5GHz 802.11a/n 300Mbps Outdoor Wireless AP (IP67, 802.3af/at PoE, 2 x N-Type Connector)

Appendix

- **Related 802.3at PoE+ Splitters and Extenders:**

Model Name		Description
IPOE-162S		Industrial IEEE 802.3at High Power over Ethernet Splitter(12V & 24V)
IPOE-E202		Industrial 1-Port 802.3at PoE+ to 2-Port 802.3af PoE Extender

Appendix

- **Related Power Supply:**

Model Name		Description
PWR-120-48		48V, 120W Din-rail Power Supply (NDR-120-48, adjustable 48-56V DC Output)

Activating IP Power